hydrostaticDRIVE

Low fuel consumption

High stability

Ergonomic and easily adjustable operating concept.

Ergonomic workstation

DFG/TFG 316s/320s

Diesel and LPG forklift trucks with hydrostatic drive (1,600/2,000 kg)

Our diesel and LPG forklift trucks with hydrostaticDRIVE offer outstanding throughput, particularly when reversing (e.g. during the loading of HGVs). This is where their strengths truly come into play: Dynamic acceleration, fast reversing and precision driving. With 5 operating programs, the performance characteristics can be adapted to the requirements of numerous varied applications.

State-of-the-art engines from the automotive industry feature impressive electronic control units. They provide precise operation and optimum productivity combined with low fuel consumption. All the engines are characterised by low emissions, falling significantly below the strict EU directives. Available as options are a regulated 3-way catalytic converter for LPG trucks as well as soot / particle filter systems for diesel trucks.

The generously dimensioned workstation is optimally designed with the operator in mind. The infinitely adjustable steering column with memory function and the armrest, allow for adjustment to suit all operator sizes. The single-point adjustment via 2 adjustable axes enables the primary controls to be quickly and intuitively adjusted. This ensures safety, protects health and enables the operator to concentrate fully on their work whilst being in a relaxed and stress-free environment. The laminated safety glass roof panel offers protection from the weather and falling items. The increased amount of light in the cabin creates a pleasant working atmosphere contributing to faster and safer stacking and retrieval. These are the best requirements for ensuring maximum productivity throughout the shift.

JUNGHEINRICH

DFG/TFG 316s/320s

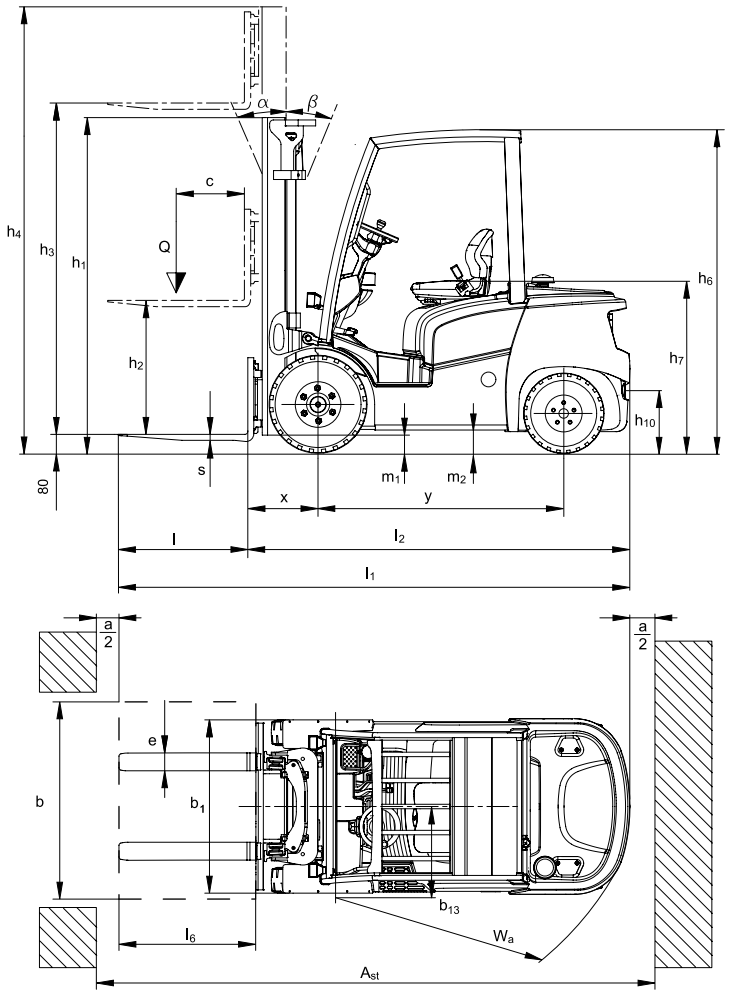

Capacity (kg)

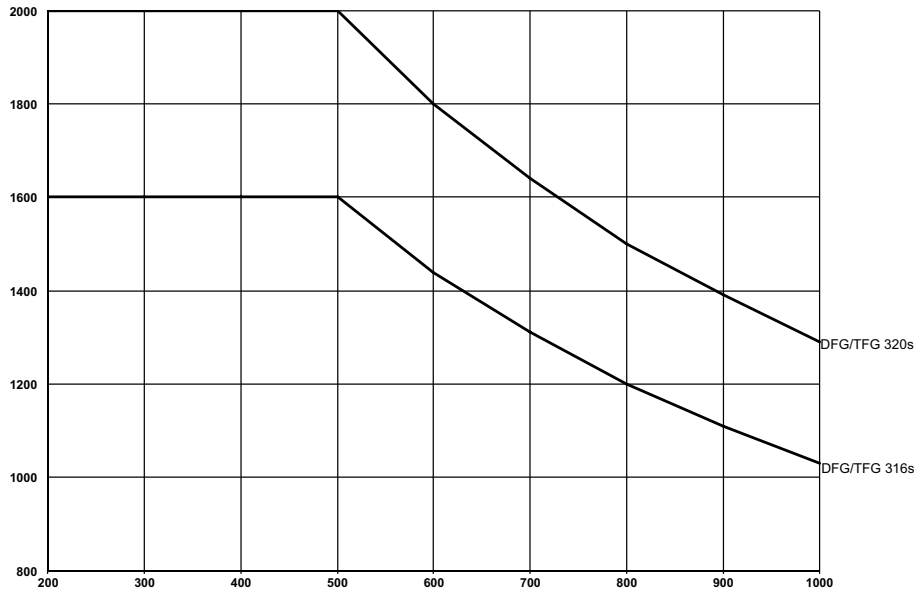

Load centre distance “c” in mm

DFG/TFG 316s/320s

Standard mast designs DFG 316s/DFG 320s/TFG 316s/TFG 320s									
	Lift h_3 (mm)	Lowered mast height h_1 (mm)		Free lift h_2 (mm)		Extended mast height h_4 (mm)		Mast tilt forward / back α/β (°)	
		DFG 316s / TFG 316s	DFG 320s / TFG 320s	DFG 316s / TFG 316s	DFG 320s / TFG 320s	DFG 316s / TFG 316s	DFG 320s / TFG 320s	DFG 316s / TFG 316s	DFG 320s / TFG 320s
Duplex ZT	2900	2005	2012	150	150	3479	3501	7/7	7/7
	3100	2105	2112	150	150	3679	3701	7/7	7/7
	3300	2205	2212	150	150	3879	3901	7/7	7/7
	3500	2305	2312	150	150	4079	4101	7/6	7/6
	3700	2405	2412	150	150	4279	4301	7/6	7/6
	4000	2505	2512	150	150	4579	4601	7/6	7/6
	4300	2705	2712	150	150	4879	4901	7/6	7/6
	4500	2805	2812	150	150	5079	5101	7/6	7/6
	5000	-	3117	-	150	-	5612	-	7/5
Duplex ZZ	3100	2060	2067	1474	1432	3679	3731	7/7	7/7
	3300	2160	2167	1574	1532	3879	3931	7/7	7/7
	3500	2260	2267	1674	1632	4079	4131	7/6	7/6
	3700	2360	2367	1774	1732	4279	4331	7/6	7/6
	4000	2510	2517	1924	1882	4579	4631	7/6	7/6
Triplex DZ	4400	2020	2027	1434	1397	4979	5031	7/5	7/5
	4640	2100	2107	1514	1477	5219	5271	7/5	7/5
	4700	2120	2127	1530	1485	5279	5331	7/5	7/5
	4800	2160	2167	1570	1525	5379	5431	7/5	7/5
	5000	2230	2237	1644	1607	5579	5631	7/5	7/5
	5500	2410	2417	1824	1787	6079	6131	7/5	7/5
	6000	2580	2587	1994	1962	6579	6631	7/5	7/5
	6500	2760	2767	2174	2140	7079	7131	7/5	7/5
	7000	2930	2937	2344	2307	7579	7631	-	-
	7500	3100	3107	2514	2477	8079	8131	-	-

Technical data in line with VDI 2198

Identification	1.1	Manufacturer (abbreviation)			Jungheinrich	
	1.2	Model			**DFG 316s**	**DFG 320s**
	1.3	Drive			Diesel	
	1.4	Manual, pedestrian, stand-on, seated, order picker operation			seat	
	1.5	Load capacity/rated load	Q	t	1.6	2
	1.6	Load centre distance	c	mm	500	
	1.8	Load distance	x	mm	409[1)]	416[1)]
	1.9	Wheelbase	y	mm	1,550	
Weights	2.1	Net weight		kg	2,800	3,100
	2.2	Axle loading, laden front/rear		kg	3,870 / 520	4,500 / 590
	2.3	Axle loading, unladen front/rear		kg	1,340 / 1,460	1,350 / 1,750
Wheels / frame	3.1	Tyres			SE	
	3.2	Tyre size, front		mm	6.50-10	
	3.3	Tyre size, rear		mm	18x7-8	
	3.5	Wheels, number front/rear (x = driven wheels)			2x/2	
	3.6	Tread width, front	b_{10}	mm	930	
	3.7	Tread width, rear	b_{11}	mm	870	
Basic dimensions	4.1	Tilt of mast/fork carriage forward/backward	α/β	°	7/7	
	4.2	Mast height (lowered)	h_1	mm	2,205	2,212
	4.3	Free lift	h_2	mm	150	
	4.4	Lift	h_3	mm	3,300	
	4.5	Extended mast height	h_4	mm	3,879	3,901
	4.7	Height of overhead guard	h_6	mm	2,145	
	4.8	Seat height/standing height	h_7	mm	1,048	
	4.12	Coupling height	h_{10}	mm	380	
	4.19	Overall length	l_1	mm	3,464	3,491
	4.20	Length to face of forks	l_2	mm	2,314	2,341
	4.21	Overall width	b_1/b_2	mm	1,110	
	4.22	Fork dimensions	s/e/l	mm	40 / 100 / 1,150	
	4.23	Fork carriage ISO 2328, class/type A, B			2A	
	4.24	Fork carriage width	b_3	mm	980	
	4.31	Floor clearance with load under mast	m_1	mm	100	107
	4.32	Ground clearance, centre of wheelbase	m_2	mm	120	
	4.33	Aisle width for pallets 1000 x 1200 crossways	Ast	mm	3,646	3,664
	4.34	Aisle width for pallets 800 x 1200 lengthways	Ast	mm	3,846	3,864
	4.35	Turning radius	W_a	mm	2,037	2,055
	4.36	Smallest turning radius	b_{13}	mm	545	
Performance data	5.1	Travel speed, laden/unladen		km/h	19.5 / 19.5	
	5.2	Lift speed, laden/unladen		m/s	0.6 / 0.62	
	5.3	Lowering speed, laden/unladen		m/s	0.54 / 0.57	
	5.5	Drawbar pull, laden/unladen		N	12,100	11,900
	5.7	Gradeability, laden/unladen		%	26	23
	5.9.2	Acceleration time laden/unladen to 15 m		S	4.8 / 4.4	5.1 / 4.6
	5.10	Service brake			hydrostatic	
	5.11	Parking brake			Automatic parking brake	
Combustion engine	7.1	Engine manufacturer / type			VW / BXT	
	7.2	Engine output according to ISO 1585		kW	29	
	7.3	Rated speed		/min	2,500	
	7.4	No. of cylinders			4	
	7.4.1	Cubic capacity		cm^3	1,896	
	7.5.1	Fuel consumption as per EN 16796		l/h	2.2	2.4
		CO- Equivalent as per EN 16796		kg/h	7	7.6
Misc.	8.1	Type of drive control			hydrostatic	
	8.2	Working pressure for attachments		bar	160	
	8.3	Oil flow for attachments		l/min	30	
	8.4	Sound pressure level at operator's ear as per EN 12053		dB (A)	77	
	8.5	Trailer coupling, model/type DIN			DIN 15170 type H	

[1)] +27.5 mm integrated sideshift

In accordance with VDI Guideline 2198, this data sheet provides details of the standard truck only. Non-standard tyres, different masts, optional equipment, etc. may result in different values.

Technical data in line with VDI 2198

Identification	1.1	Manufacturer (abbreviation)			Jungheinrich		
	1.2	Model			**TFG 316s**		**TFG 320s**
	1.3	Drive			LPG		
	1.4	Manual, pedestrian, stand-on, seated, order picker operation			seat		
	1.5	Load capacity/rated load	Q	t	1.6		2
	1.6	Load centre distance	c	mm	500		
	1.8	Load distance	x	mm	409[1)]		416[1)]
	1.9	Wheelbase	y	mm	1,550		
Weights	2.1	Net weight		kg	2,800		3,100
	2.2	Axle loading, laden front/rear		kg	3,860 / 530		4,490 / 600
	2.3	Axle loading, unladen front/rear		kg	1,330 / 1,470		1,340 / 1,760
Wheels / frame	3.1	Tyres			SE		
	3.2	Tyre size, front		mm	6.50-10		
	3.3	Tyre size, rear		mm	18x7-8		
	3.5	Wheels, number front/rear (x = driven wheels)			2x/2		
	3.6	Tread width, front	b_{10}	mm	930		
	3.7	Tread width, rear	b_{11}	mm	870		
Basic dimensions	4.1	Tilt of mast/fork carriage forward/backward	α/β	°	7/7		
	4.2	Mast height (lowered)	h_1	mm	2,205		2,212
	4.3	Free lift	h_2	mm	150		
	4.4	Lift	h_3	mm	3,300		
	4.5	Extended mast height	h_4	mm	3,879		3,901
	4.7	Height of overhead guard	h_6	mm	2,145		
	4.8	Seat height/standing height	h_7	mm	1,048		
	4.12	Coupling height	h_{10}	mm	380		
	4.19	Overall length	l_1	mm	3,464		3,491
	4.20	Length to face of forks	l_2	mm	2,314		2,341
	4.21	Overall width	b_1/b_2	mm	1,110		
	4.22	Fork dimensions	s/e/l	mm	40 / 100 / 1,150		
	4.23	Fork carriage ISO 2328, class/type A, B			2A		
	4.24	Fork carriage width	b_3	mm	980		
	4.31	Floor clearance with load under mast	m_1	mm	100		107
	4.32	Ground clearance, centre of wheelbase	m_2	mm	120		
	4.33	Aisle width for pallets 1000 x 1200 crossways	Ast	mm	3,646		3,664
	4.34	Aisle width for pallets 800 x 1200 lengthways	Ast	mm	3,846		3,864
	4.35	Turning radius	W_a	mm	2,037		2,055
	4.36	Smallest turning radius	b_{13}	mm	545		
Performance data	5.1	Travel speed, laden/unladen		km/h	19.5 / 19.5		
	5.2	Lift speed, laden/unladen		m/s	0.6 / 0.62		
	5.3	Lowering speed, laden/unladen		m/s	0.54 / 0.57		
	5.5	Drawbar pull, laden/unladen		N	12,100		12,400
	5.7	Gradeability, laden/unladen		%	27		26
	5.9.2	Acceleration time laden/unladen to 15 m		S	5 / 4.6		5.1 / 4.7
	5.10	Service brake			hydrostatic		
	5.11	Parking brake			Automatic parking brake		
Combustion engine	7.1	Engine manufacturer / type			VW / BEF		
	7.2	Engine output according to ISO 1585		kW	31		
	7.3	Rated speed		/min	2,500		
	7.4	No. of cylinders			4		
	7.4.1	Cubic capacity		cm^3	1,980		
	7.5	Fuel consumption as per EN 16796		kg/h	2		2.2
		CO- Equivalent as per EN 16796		kg/h	6.8		7.5
Misc.	8.1	Type of drive control			hydrostatic		
	8.2	Working pressure for attachments		bar	160		
	8.3	Oil flow for attachments		l/min	30		
	8.4	Sound pressure level at operator's ear as per EN 12053		dB (A)	75		
	8.5	Trailer coupling, model/type DIN			DIN 15170 type H		

[1)] +27.5 mm integrated sideshift

In accordance with VDI Guideline 2198, this data sheet provides details of the standard truck only. Non-standard tyres, different masts, optional equipment, etc. may result in different values.

DFG/TFG 316s/320s

Ergonomic workstation
The ergonomics of the operator's workstation guarantee relaxed, fatigue-free work:
- Comfortable and safe access and exit thanks to a large entry step easily visible from above.
- Height and rake adjustable, slim steering column with memory function.
- Outstanding all-round visibility.
- Clear view of the load thanks to optimised chain and hose layout.
- Compact nested profile package with excellent visibility.
- Integration of all main controls into the armrest which moves with the movement of the operator.
- Operator-oriented storage concept for intuitive operation.
- High-resolution, contrast-rich full-colour TFT display with self-explanatory user interface.
- USB power supply port for e.g. MP3 players.
- Limited vibration as the cab is not directly connected to the frame (floating cab).

Ergonomic and easily adjustable operating concept.
- Selection from 5 freely adjustable travel programs.
- Stepless single-point adjustment of the armrest in 2 axial directions.
- Large armrest with adjustable tilt with a spacious storage compartment.
- A choice of 3 different controls.
- Single or double pedal operation.
- Adjustable lever and axis assignment of the controls.

Benefit from the advantages

Maximum throughput

Workstation is comfortable and helps to maximise productivity

VW engines with low energy consumption

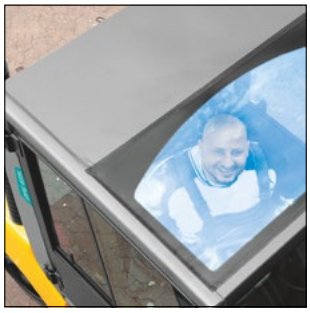
Outstanding all-round visibility

Performance and drive characteristics

hydrostaticDRIVE offers the best energy efficiency coupled with maximum throughput performance – particularly when reversing:

- Stepless power transmission and high starting torques.
- Electronic control for precise adjustment of drive and hydraulic functions.
- 5 electronically selectable operating / travel programs.
- Performance parameters for every application.
- Automatic motor speed increase during lifting and lowering.
- Very precise control of travel speed.
- Low maintenance costs through direct drive without wearing parts such as the clutch.
- Hydrostatic steering ensures effortless and precise steering.

Safety and assistance systems

Comprehensive safety equipment for high drive dynamics and performance. Trucks with hydrostaticDRIVE offer a comprehensive safety package as standard:

- Deactivation of the hydraulic functions if seat is unoccupied.
- No uncontrolled roll-back on ramps or inclines due to the parking brake, even with the engine switched off.
- Excellent stability due to extremely low inherent centre of gravity and high pivot steer axle.
- Damping on mast and tilt cylinders for increased handling safety.

Additional safety for the operator, truck and load due to a range of optional operator assistance systems:

- accessCONTROL: The access control system allows operation of the fork lift only if the 'seat occupied' and belt lock detection systems have been activated in a defined sequence.
- driveCONTROL: Speed control, which automatically reduces the speed both when cornering and from a defined lift height.
- liftCONTROL (includes driveCONTROL): Automatic mast tilt speed reduction occurs from a defined lift height, tilt angle shown on separate display.

Hydraulics

The high-performance filter system ensures cleaner oil and a long service life for all components:

- Full-flow hydraulic oil filtration with suction and return filter for maximum oil purity.
- Hydraulic tank integrated in frame.
- Ventilation of hydraulic tank via filter
- Pressure relief valves protect against excess pressure and overloading.

Brakes

The hydrostatic drive allows for completely wear-free braking:

- Frequent brake pedal operation is no longer necessary.
- Parking brake – sprung-loaded laminated oil immersed parking brake as a maintenance-free, enclosed system.

Intelligent controls and electronics

- Software and hardware for controls developed and produced in-house.
- Sensitive adjustment of hydraulic functions via electromagnetic valves.
- Splash-proof electronic drive and hydraulic controls in CAN-Bus design.

Engines

- State-of-the-art engines with performance figures falling far within the strict statutory limit values.
- Powerful yet low-consumption engines.

Jungheinrich UK Ltd.

Head Office:
Sherbourne House
Sherbourne Drive
Tilbrook
Milton Keynes MK7 8HX
Telephone 01908 363100
Fax 01908 363180

info@jungheinrich.co.uk
www.jungheinrich.co.uk

The German production facilities in Norderstedt, Moosburg and Landsberg are certified. ISO 9001 ISO 14001

Jungheinrich fork lift trucks meet European safety requirements. CE

JUNGHEINRICH

T_DFG/TFG 316s/320s_022018_en_UK_000