Self-Propelled Articulating Booms

Z™-30/20N & Z-30/20N RJ

Specifications

Models	Z-30/20N		Z-30/20N RJ	
Measurements	**Metric**	**US**	**Metric**	**US**
Working height maximum*	11.14 m	36 ft	10.89 m	35 ft 2 in
Platform height maximum	9.14 m	30 ft	8.89 m	29 ft 2 in
Horizontal reach maximum	6.53 m	21 ft 5 in	6.25 m	20 ft 6 in
Up and over clearance maximum	3.86 m	12 ft 8 in	3.86 m	12 ft 8 in
A Platform length	0.76 m	2 ft 6 in	0.76 m	2 ft 6 in
B Platform width	1.17 m	3 ft 10 in	1.17 m	3 ft 10 in
C Height - stowed	2 m	6 ft 6.5 in	2 m	6 ft 6.5 in
D Length - stowed	5.11 m	16 ft 9 in	5.31 m	17 ft 5 in
E Storage height	2.08 m	6 ft 10 in	2.24 m	7 ft 4 in
F Storage length	3.5 m	11 ft 6 in	3.66 m	12 ft
G Width	1.19 m	3 ft 11 in	1.19 m	3 ft 11 in
H Wheelbase	1.58 m	5 ft 2 in	1.58 m	5 ft 2 in
I Ground clearance - center	0.09 m	3.5 in	0.09 m	3.5 in
Productivity				
Lift capacity	227 kg	500 lbs	227 kg	500 lbs
Platform rotation	180°	180°	180°	180°
Vertical jib rotation	139°	139°	139°	139°
Horizontal jib rotation	———	———	180°	180°
Turntable rotation	355° non-continuous		355° non-continuous	
Turntable tailswing	zero	zero	zero	zero
Drive speed - stowed	4.8 km/h	3.0 mph	4.8 km/h	3.0 mph
Drive speed - raised**	30 cm/s	1 ft/s	30 cm/s	1 ft/s
Gradeability - stowed***	35%	35%	35%	35%
Turning radius - inside	1.65 m	5 ft 5 in	1.65 m	5 ft 5 in
Turning radius - outside	3.23 m	10 ft 7 in	3.23 m	10 ft 7 in
Controls	24 V DC proportional		24 V DC proportional	
Tyres - solid non-marking	56 x 18 x 45 cm	22x7x17.75 in	56 x 18 x 45 cm	22x7x17.75 in
Power				
Power source	48 V DC (eight 6 V batteries 350 Ah capacity)		48 V DC (eight 6 V batteries 350 Ah capacity)	
Auxiliary power unit	24 V DC	24 V DC	24 V DC	24 V DC
Hydraulic tank capacity	15.1 L	4 gal	15.1 L	4 gal
Sound & Vibration Levels				
Sound pressure level (ground)	<70 dBA	<70 dBA	<70 dBA	<70 dBA
Sound pressure level (platform)	<70 dBA	<70 dBA	<70 dBA	<70 dBA
Vibration	<2.5 m/s²	<8 ft 2 in/s²	<2.5 m/s²	<8 ft 2 in/s²
Weight****				
	6,428 kg	14,170 lbs	6,450 kg	14,220 lbs

Standards Compliance EU Directives: 2006/42/EC - Machinery (harmonized standard EN280:2001+A2:2009); 2004/108/EC (EMC); 2006/95/EC (LVD)

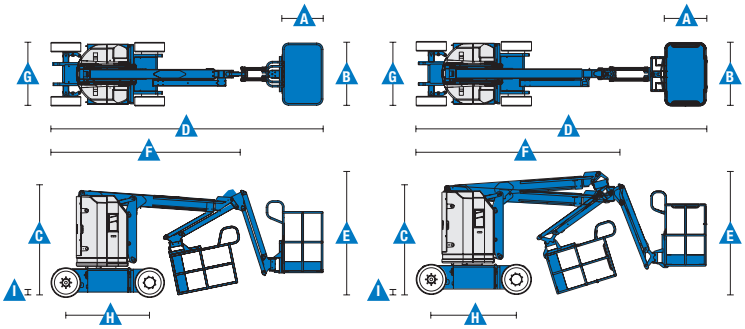

Range Of Motion Z-30/20N

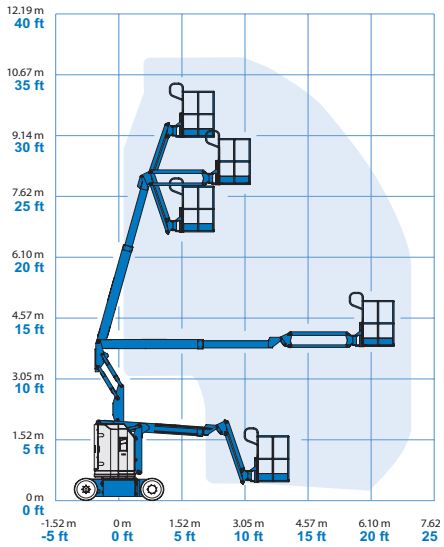

Range Of Motion Z-30/20N RJ

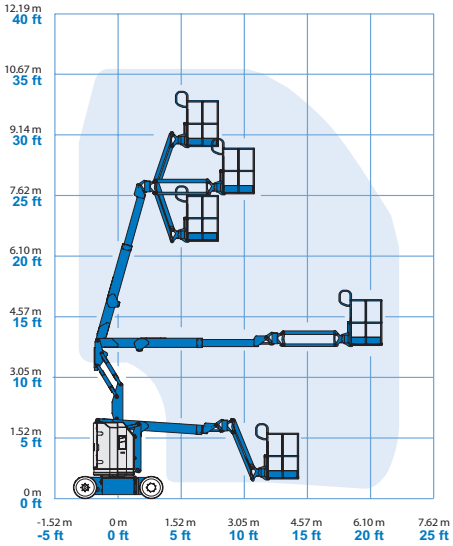

Jib Range of Motion Z-30/20N RJ

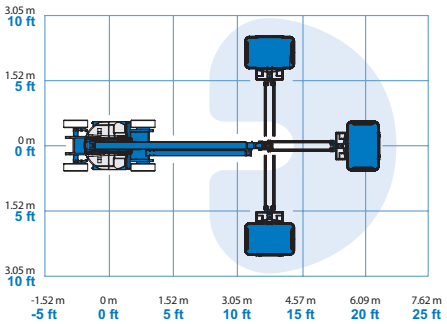

* The metric equivalent of working height adds 2 m to platform height. U.S. adds 6 ft to platform height.
** In lift mode (platform raised), the machine is designed to operated on firm, level surfaces only.
*** Gradeability applies to driving on slopes. See operator's manual for details regarding slope ratings.
**** Weight will vary depending on options and/or country standards.

Self-Propelled Articulating Booms

Z™-30/20N & Z-30/20N RJ

Features

Standard Features

Measurements

Z-30/20N

- 11.14 m (36 ft) working height
- 6.53 m (21 ft 5 in) horizontal reach
- 3.86 m (12 ft 8 in) up and over clearance
- Up to 227 kg (500 lbs) lift capacity

Z-30/20N RJ

- 10.89 m (35 ft 2 in) working height
- 6.25 m (20 ft 6 in) horizontal reach
- 3.86 m (12 ft 8 in) up and over clearance
- Up to 227 kg (500 lbs) lift capacity

Productivity

- 1.22 m (4 ft) jib boom with 139° working range
- Self-levelling platform
- Hydraulic platform rotation
- Fully proportional controls
- Thumb rocker steer
- Drive enable
- AC power cord to platform
- Horn
- Hour meter
- Tilt alarm
- Descent & travel alarms
- Flashing beacon
- 355° non-continuous turntable rotation
- Zero tailswing and front arm swing
- Certified load sensor

Power

- 48 V DC deep cycle battery pack
- 24 V DC auxiliary power
- Universal 30A battery smart charger
- Battery charge indicator
- Low battery voltage interrupt

Easily Configured To Meet Your Needs

Platform

- Steel 1.17 m (3 ft 10 in)

Jib Options

- Articulating 1.22 (4 ft) jib boom
- 1.22 m (4 ft) horizontal rotating jib boom

Power

- 48 V DC (eight 6V 350 Ah capacity batteries)

Drive

- 2 x 4

Tyres

- Solid rubber non-marking

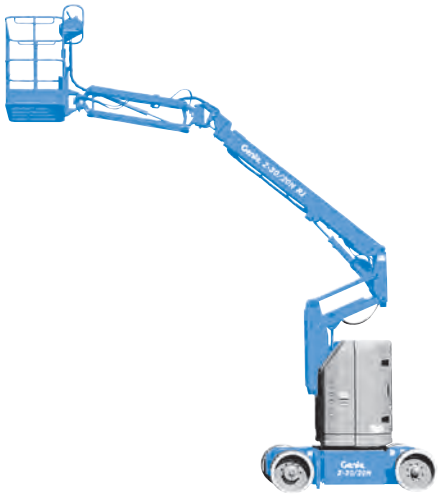

Options & Accessories

Productivity

- Platform swing gate
- Half-mesh platform inserts with swing gate
- Platform top auxiliary rail
- Air line to platform
- Power to platform (incl. plug, socket and ground fault interrupt leakage on request)
- Work lights package (2 on chassis, 2 on platform)
- Aircraft protection kit [1,2]: platform foam padding and padded disable system (except RJ model)
- Hostile environment kit [2]: cylinder bellow, boom wiper seals and platform control box covers
- Biodegradable hydraulic oil [2]
- Tilt cut-out option
- Track & Trace [3] (GPS unit providing machine location & operating information)
- Lockable platform control box cover
- Tool tray

Power

- AGM maintenance-free batteries [2]

[1] Reduces platform load capacity to 199,6 kg (440 lbs)
[2] Factory-fit option only
[3] Includes a first 2 years subscription

HireSafe SOLUTIONS
t 0845 548 4455 f 01925 551 990
e info@hiresafesolutions.com w www.hiresafesolutions.com
Junction Lane, Sankey Industrial Estate, Newton-le-Willows, WA12 8DN