Self-Propelled Articulating Booms

Z™-45/25 RT & Z-45/25J RT

Specifications

Models	Z-45/25 RT		Z-45/25J RT	
Measurements	**Metric**	**US**	**Metric**	**US**
Working height maximum*	15.97 m	51 ft 10 in	16.05 m	52 ft 1 in
Platform height maximum	13.97 m	45 ft 10 in	14.05 m	46 ft 1 in
Horizontal reach maximum	7.49 m	24 ft 7 in	7.52 m	24 ft 8 in
Up and over clearance maximum	7.14 m	23 ft 5 in	7.14 m	23 ft 5 in
A Platform length	0.76 m	2 ft 6 in	0.76 m	2 ft 6 in
B Platform width	1.83 m	6 ft	1.83 m	6 ft
C Height - stowed	2.13 m	7 ft	2.13 m	7 ft
D Length - stowed	5.38 m	17 ft 8 in	6.65 m	21 ft 10 in
E Width	2.29 m	7 ft 6 in	2.29 m	7 ft 6 in
F Wheelbase	2.03 m	6 ft 8 in	2.03 m	6 ft 8 in
G Ground clearance - center	0.37 m	1 ft 2.5 in	0.37 m	1 ft 2.5 in
Productivity				
Lift capacity	227 kg	500 lbs	227 kg	500 lbs
Platform rotation	180°	180°	160°	160°
Vertical Jib rotation	———	———	135°	135°
Turntable rotation	355° non-continuous		355° non-continuous	
Turntable tailswing	zero	zero	zero	zero
Drive speed - stowed	7.24 km/h	4.5 mph	7.24 km/h	4.5 mph
Drive speed - raised **	1.00 km/h	0.61 mph	1.00 km/h	0.61 mph
Gradeability - 4WD - stowed***	45%	45%	45%	45%
Turning radius - inside	1.68 m	5 ft 6 in	1.68 m	5 ft 6 in
Turning radius - outside	4.50 m	14 ft 9 in	4.50 m	14 ft 9 in
Controls	12 V DC proportional		12 V DC proportional	
Tyres	355/55 D20		355/55 D20	
Power				
Power source	Ford MSG425 4 cylinder gas/LPG 44.7 kW (60 hp) Deutz diesel D2011L03i 3 cylinder diesel 35.8 kW (48 hp) Perkins diesel 404-D22 4 cylinder diesel 38 kW (51 hp)			
Auxiliary power unit	12 V DC		12 V DC	
Hydraulic tank capacity	83 L	22 gal	83 L	22 gal
Fuel tank capacity	64.4 L	17 gal	64.4 L	17 gal
Sound & Vibration Levels				
Sound pressure level (ground workstation)	87 dBA	87 dBA	87 dBA	87 dBA
Sound pressure level (platform workstation)	82 dBA	82 dBA	82 dBA	82 dBA
Vibration	<2.5 m/s²	<8 ft 2 in/s²	<2.5 m/s²	<8 ft 2 in/s²
Weight****				
CE 4WD (air tyres)	6,078 kg	13,400 lbs	6,123 kg	13,500 lbs
CE 4WD (foam filled tyres)	6,415 kg	14,144 lbs	6,460 kg	14,244 lbs

Standards Compliance

EU Directives: 2006/42/EC - Machinery Directive
Harmonized Standards: EN280:2001+A2:2009; 2004/108/EC (EMC); 2000/14/EC (Outdoor Noise)

Range Of Motion Z-45/25 RT

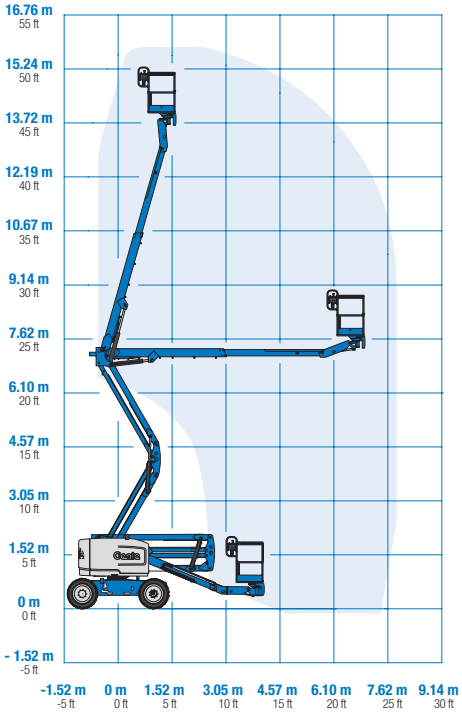

Range Of Motion Z-45/25J RT

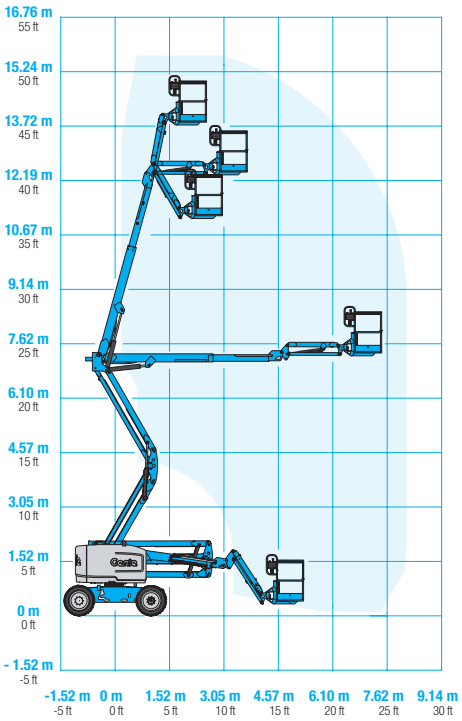

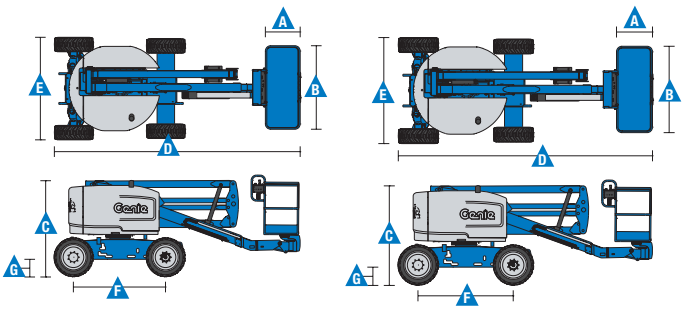

* The metric equivalent of working height adds 2 m to platform height. U.S. adds 6 ft to platform height.
** In lift mode (platform raised), the machine is designed to operate on firm, level surfaces only.
*** Gradeability applies to driving on slopes. See operator's manual for details regarding slope ratings.
**** Weight will vary depending on options and/or country standards.

Self-Propelled Articulating Booms

Z™-45/25 RT & Z-45/25J RT

Features

Standard Features

Measurements

Z-45/25 RT

- 15.97 m (51 ft 10 in) working height
- 7.49 m (24 ft 7 in) horizontal reach
- 7.14 m (23 ft 5 in) up and over clearance
- Up to 227 kg (500 lbs) lift capacity

Z-45/25J RT

- 16.05 m (52 ft 1 in) working height
- 7.52 m (24 ft 8 in) horizontal reach
- 7.14 m (23 ft 5 in) up and over clearance
- Up to 227 kg (500 lbs) lift capacity

Productivity

- Self-levelling platform
- Hydraulic platform rotation
- Fully proportional controls
- Thumb rocker steering
- Drive enable
- AC power cord to platform
- Horn
- Hour meter
- Tilt alarm
- Descent & travel alarms
- Flashing beacon
- 355° non-continuous turntable rotation
- Positive traction drive
- Two speed wheel motors
- Certified load sensor

Power

- 12 V DC auxiliary power
- Engine protection package
- Deutz intake air heater
- Swing out engine tray

Easily Configured To Meet Your Needs

Platform Options

- Steel 1.83 m (6 ft) (standard)
- Steel 1.22 m (4 ft) (option)
- Steel 1.83 m (6 ft) tri-entry (option)

Jib Options

- Non-jib
- Articulating 1.52 m (5 ft) jib boom

Power Options

- Ford gas/LPG 44.7 kW (60 hp)
- Deutz diesel 35.8 kW (48 hp)
- Perkins diesel 38 kW (51 hp)

Drive Options

- 4 x 4

Axle Options

- Active oscillation

Tyre Options

- Rough terrain air-filled (standard)
- Rough terrain foam-filled
- Rough terrain non-marking (air or foam-filled)

Options & Accessories

Productivity

- Platform swing gate [1]
- Half mesh platform inserts with swing gate [1]
- Platform top auxiliary rail
- Air line to platform
- Power to platform (incl, plug, socket and ground fault interrupt leakage on request)
- Work lights package (2 on chassis, 2 on platform)
- Dual axis joystick steering
- Biodegradable hydraulic oil
- Hostile environment kit [2]: cylinder bellows, boom wiper seals and platform control box covers
- Aircraft protection kit [2,5]: platform foam padding and padded disable system (available on Jib models only)
- Tilt cut-out option
- Track & Trace [3] (GPS unit providing machine location & operating information)
- Panel cradle package [2] (requires foam filled tyres & tri-entry platfrom)
- Lockable platform control box cover
- Tool tray
- Operator Protective Structure

Power

- Diesel catalytic scrubber muffler with spark arrestor
- Engine gauge package (oil pressure & temperature)
- AC generator packages (110V/60Hz - 220V/50Hz, 3000W)
- Deutz V-belt Generator kit [4] (110V-220V)
- Low temperature cut-out module
- Engine heater option [4]
- Refinery kit with spark arrestor and electric or mechanical Chalwyn valve [4]

[1] Not available on tri-entry platforms
[2] Factory-fit option only
[3] Includes a first 2 years subscription
[4] Available with Deutz engine only
[5] Reduces platform load capacity to 440 lbs

Fir Tree Farm
Warmington
Banbury
Oxfordshire
OX17 1JL

Junction Lane
Sankey Valley Ind Est
Newton-Le-Willows
Merseyside
WA12 8DN

0800 865 4455
info@hiresafesolutions.com
@HireSafeSol
facebook.com/hiresafesolutions